CLEAN

RAF Series

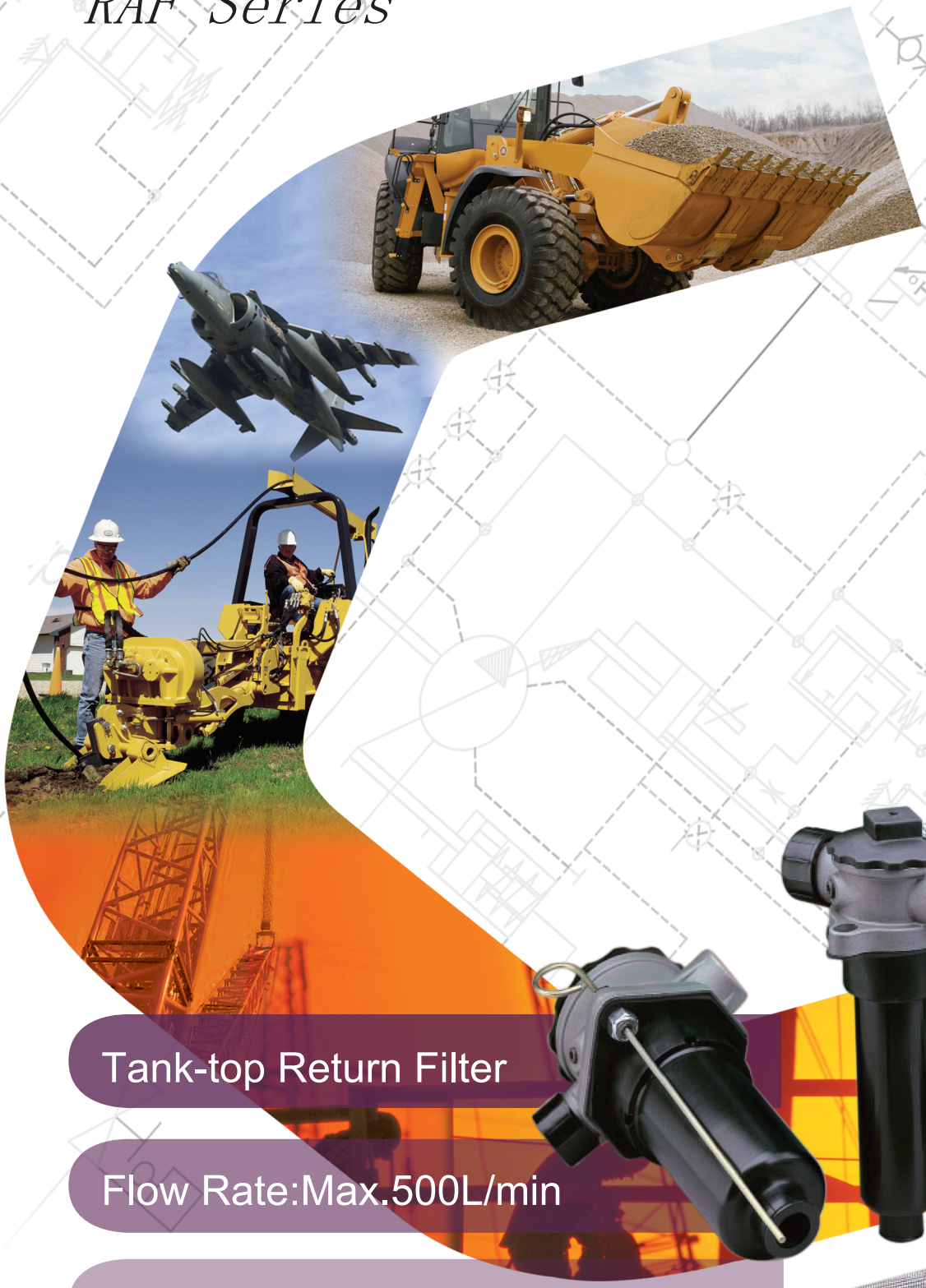

Tank-top Return Filter

Flow Rate:Max.500L/min

Operation Pressure:Max.3bar

Specifications

Type of construction: tank top mounted
Operating pressure: max. 3 bar
Connections: threaded NPT/Metric/SAE flange
Seal material: NBR,Viton on request
Operating temperature range: -30℃to +110℃
filtration media: glass fibre, cellulose,wire mesh
Element collapse rating: 10 bar (iso 2941)
Bypass setting: opening pressure 1.75 bar
Pressure indicator options: 1.5 bar
Filter housing: aluminium housing
Fluid compatibility: suitable for mineral oils, synthetic oils. For use with water, please contact our company.

Hydraulic symbol

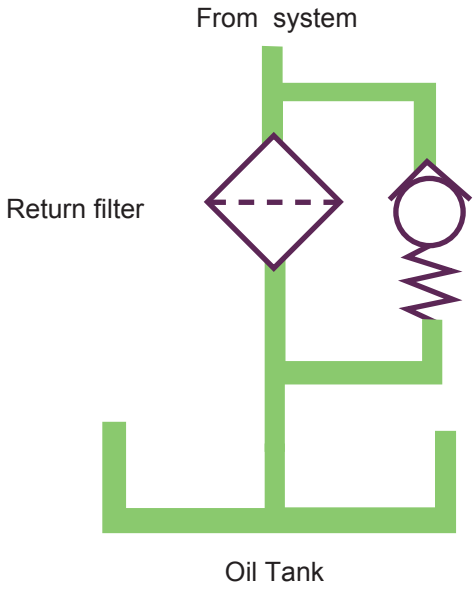

Ordering Code

The Completed Filter

RAF 0160 F 010 N N16 V A

Filter type

Flow rate (L/min)
0040,0063, 0120,0160,0300,0400,0500

Element material
P:Celullose (βx=2), F:Glass fiber(βx≥200),
W:Wire mesh

Filtration rating(μm)
(F): 002, 005, 010, 020 (P): 010, 025 (W): 040

Seals
N:NBR, V:Viton

Port type/Size

Flow Rate	Type/Size			
	N(NPT thread)			F(Flange)
	08	12	16	80
RAF0040	●			
RAF0063		●		
RAF0120		●		
RAF0160			●	
RAF0300				●
RAF0400				●
RAF0500				●
N08=NPT$^{1}/_{2}$", N12=NPT$^{3}/_{4}$", N16=NPT1"				
F80=SAE 3"-3000psi				

Indicators
N: No, V: Pressure Gauge , E: Pressure Switch 1.5Bar

Air breather
N: No，A:With air breather
* RAF 0400 Without air breather

The Replacement Element

RAE 160 F 010 N

Element type

Flow rate（L/min)
0040, 0063, 0120, 0160, 0300,0400,0500

Element material
P:Celullose (βx=2), F:Glass fiber(βx≥200), W:Wire mesh

Filtration rating(μm)
(F): 002, 005, 010, 020 (P): 010, 025 (W): 040

Seals
N:NBR, V:Viton

Filter Specification

Filter	Port	Element	Weight(Kg)
RAF0040	NPT1/2”	RAE0040…	0.6
RAF0063	NPT3/4”	RAE0063…	0.8
RAF0120		RAE0120…	1.0
RAF0160	NPT 1”	RAE0160…	1.2
RAF0300	SAE 3”-3000psi	RAE0300…	9.0
RAF0400		RAE0400…	10.5
RAF0500		RAE0500…	12.5

Pressure Drop Curves

The “Assembly Pressure Drop(ΔP) is obtained by adding the pressure drop values of the filer housing and of the clean filter element and the recommended level of the initial pressure drop for return filter is less than 0.5 bar.

If the medium used has a viscosity different from 32cSt, pressure drop over the filter can be estimated as follows:

Δp = (Δp32 x viscosity of medium used) / 32cSt.

Filter pressure drop based on 32cSt fluid viscosity and 0.87 density.

Filter Housing Pressure Drop

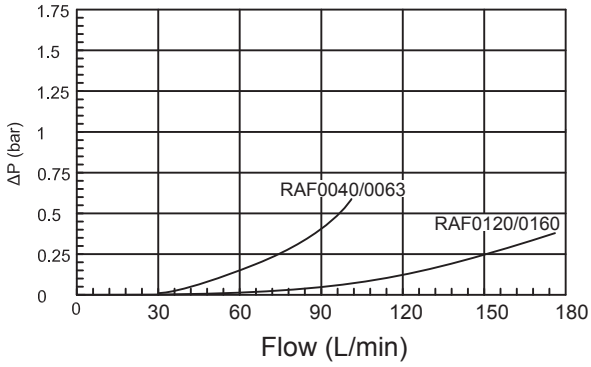

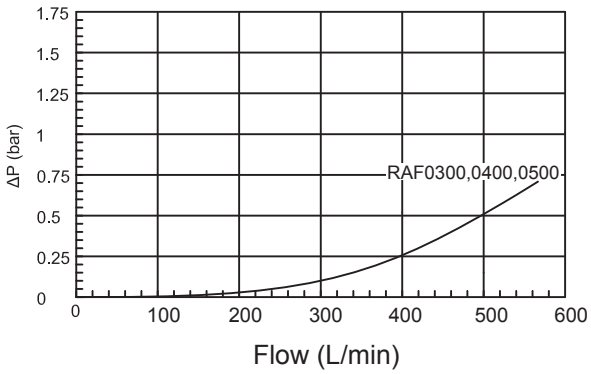

Clean Element Pressure Drop With Media F&P

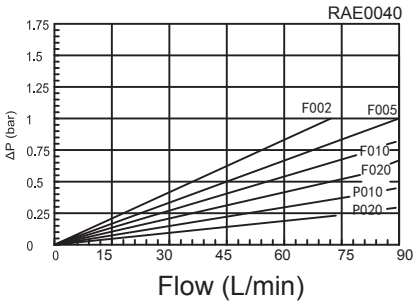

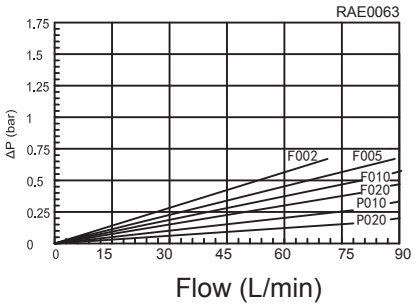

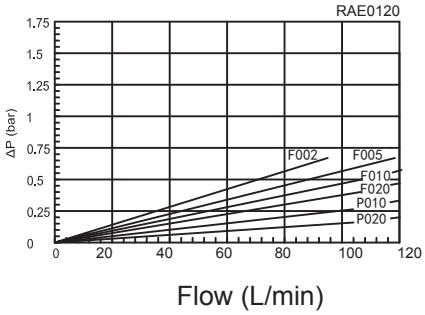

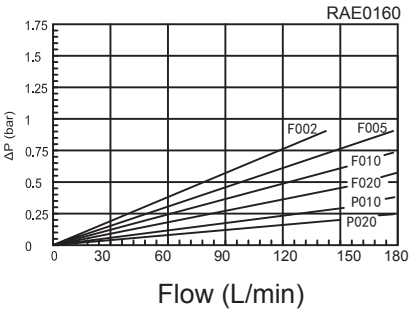

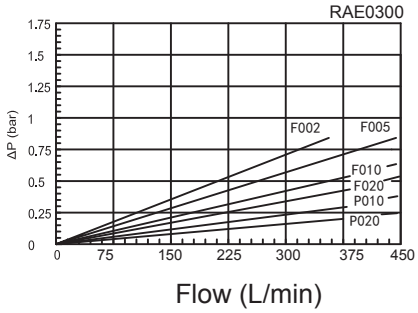

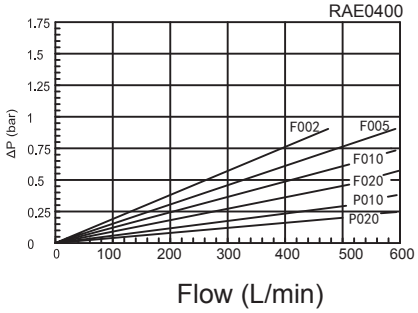

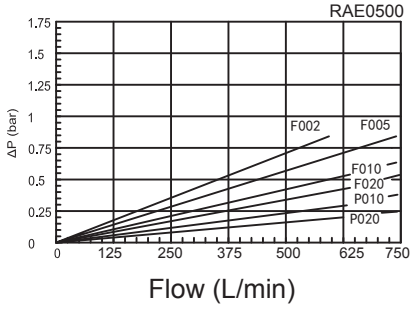

Dimensions

RAF0040-0160

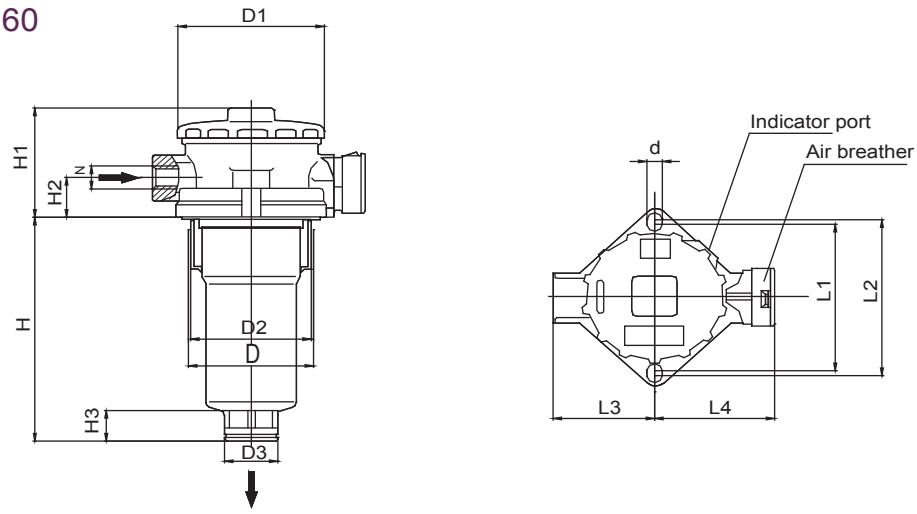

Type	N	D	H	D1	D2	D3	H1	H2	H3	L1	L2	L3	L4	d
RAF0040	NPT 1/2"	63	83	75	63	28	67	26	21	86	88	51	60	11
RAF0063	NPT 3/4"		180											
RAF0120		87	178	105	85	38	89	30	23	110	115	70	82	
RAF0160	NPT 1"		278											

RAF0300-0400-0500

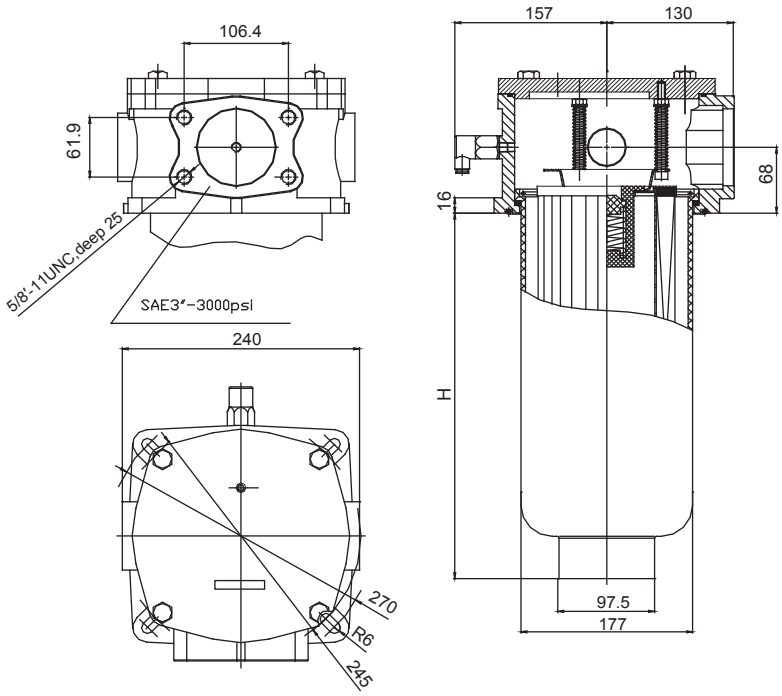

Type	H
RAF0300	300
RAF0400	380
RAF0500	480